AGOM®

IDEAS, ENGINEERING AND MANUFACTURE

AGOM R-MAX SPHERICAL BEARINGS

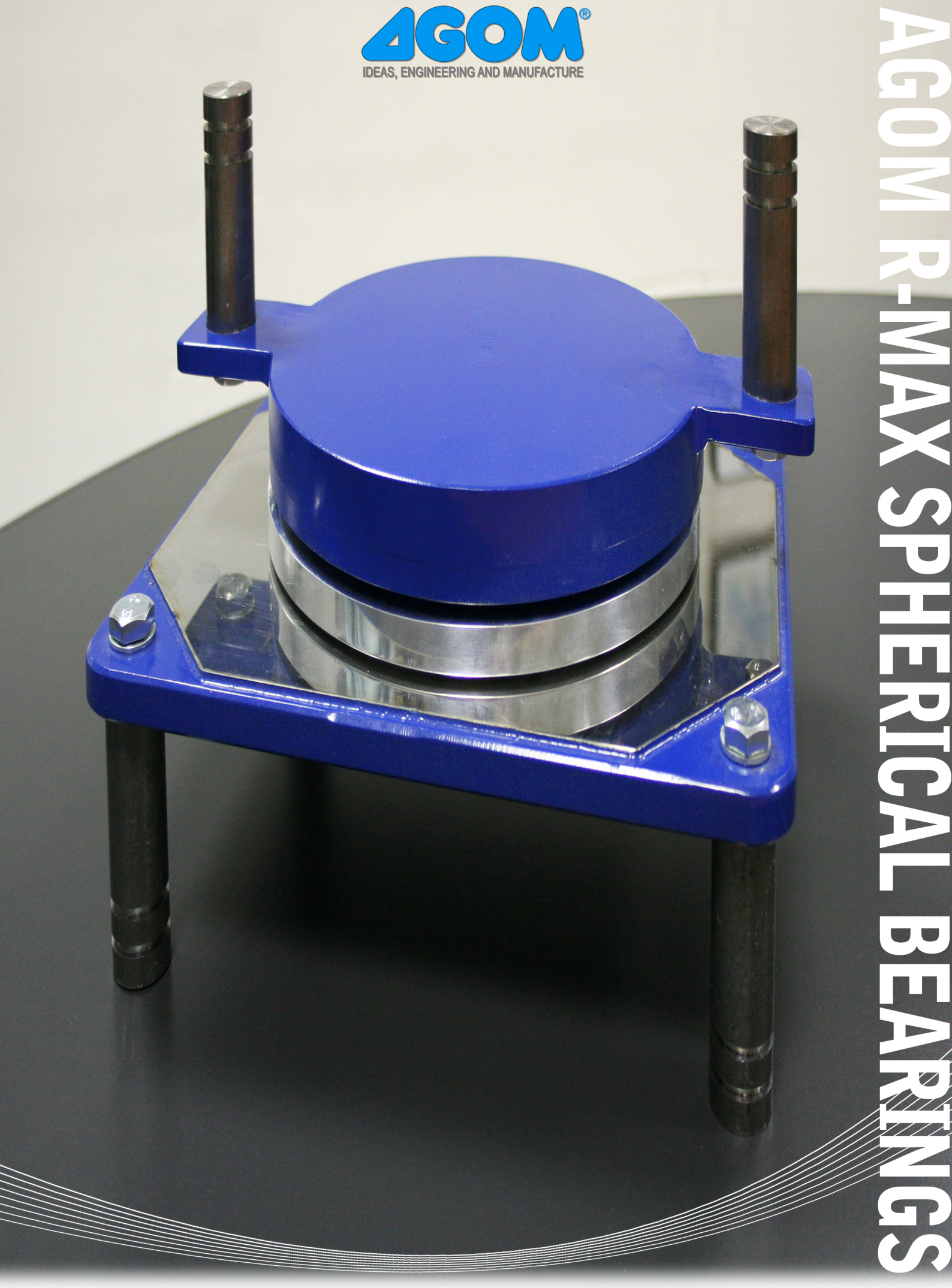

AGOM INTERNATIONAL SRL

VIA MESERO, 12 – 20010 OSSONA (MI) - Italy

PH.: 0039 02 9029111 – FAX: 0039 02 9010201 – info@agom.it

Section 5

Agom R-Max spherical bearings

a) Catalogue
b) Technical data sheet
c) Drawings
d) Installation instructions

R-MAX SPHERICAL BEARINGS

AGOM INTERNATIONAL SRL
Via Mesero, 12 – 20010 Ossona (MI) – Italy - www.agom.it
PH.: +39 02 9029111 – FAX: +39 02 9010201 – agom@agom.it

R-Max bearings

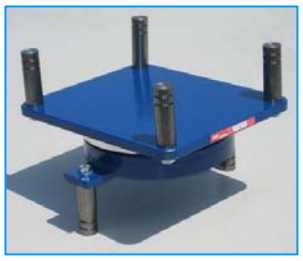

Agom R-Max bearings are designed to carry combinations of vertical loads, horizontal loads, longitudinal and transversal movements and rotations and they are used in steel and concrete road and railway bridges.

The bearing is composed by steel elements coupled with PTFE surfaces to allow movement and rotations. One side of the internal median plate is machined as a spherical surface to allow tilting movement (rotation) whilst on the other side a flat sliding surface is obtained to allow displacements.

Depending on whether the bearing is fixed, guided sliding or a free sliding, Agom R-Max bearings accommodate vertical loads and corresponding horizontal forces, as well as movements in longitudinal or transversal directions

Load Combinations

Agom R-Max bearings can carry very high loads, over 100.000 kN

The bearings are designed for combined maximum vertical and horizontal loads. The standard range of Agom bearing is designed to have an horizontal load ≤ 15% of the maximum vertical load with a maximum rotation of ± 0.02 rad (other load and rotation combinations are provided on request).In order to define the correct bearing, our engineers take into account the designed load effects, rotations, displacements and type of fixings.

Fixed R-Max AGSF

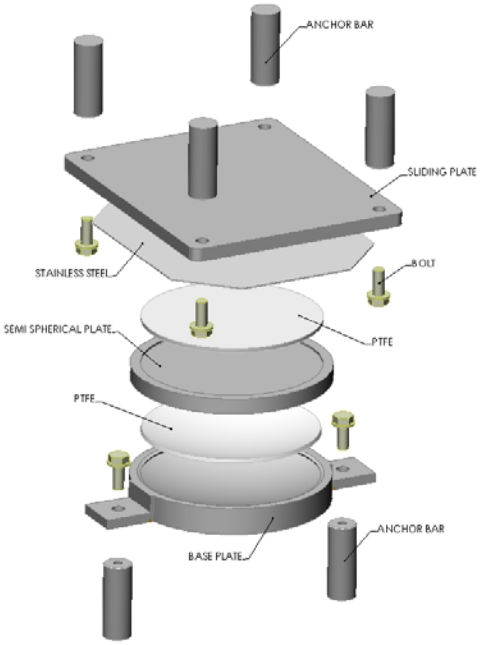

Due to the combination of vertical and horizontal loads, the R-Max bearings can be designed in two different arrangements: the two steel plates configuration and the three steel plates configuration.

The "two steel plates configuration" R-Max bearings are given by the combination of a convex and concave steel plates machined as a spherical surface to realize the hinge for rotation around every axis; the rotational surface is obtained coupling a virgin PTFE curved sheet and a spherical low roughness sliding surface (according to EN1337-2 code) to minimize friction and maximizing PTFE service life. In this "two plates R-Max spherical bearing configuration", the horizontal load is transmitted through the spherical surface to the base plate, according to design codes (as EN1337-7).

The "three plates configuration bearings" are made up by adding an external steel plate to the "two plates configuration bearings"; in this arrangement the horizontal load is transmitted by the direct contact between the bearing upper steel and the base plate whilst the spherical and PTFE surfaces carry only the vertical loads allowing rotations. The "three plates configuration" allows to transmit higher horizontal loads respect to the two plates bearings.

Agom R-Max bearings enable rotation in any direction while at the same time the structure is constrained horizontally. The bearing external steel plates is designed to fix the bearing to the structure.

Free sliding R-Max AGSM

Identical in construction to the fixed bearings, these multi-directional bearings have three plates and two PTFE surfaces one for rotation the other for sliding; the upper PTFE sheet is in direct contact with an austenitic stainless steel plate, enabling the bearing to slide in all directions.

Guided sliding R-Max AGSL- AGST

Identical in construction to the free sliding bearings these guided sliding devices are fitted with one or more guides to constrain the bearing's movement in only one direction. Also in these devices the horizontal load can be hold either by the shape of the spherical surface or by the direct contact between upper steel plates and base steel plate.

International standards

Agom R-Max bearings are designed and manufactured in accordance with the requirements of a wide range of international standards (European EN1337.7, British BS 5400, Italian CNR 10018, German DIN 4141, French SETRA B.T.4. and American AASHTO). Every single component is mechanically worked and assembled by fully qualified and trained workers at the Agom factory under strict ISO 9001:2008 accredited quality control standards.

Quality of the materials

Austenitic steel sheet

The austenitic steel used for sliding surfaces is X5CrNiMo17-12-2 in accordance with EN 10088-2 1.4401 with a minimum thickness of 1.5 mm

The roughness is Ry5i ≤ 1 µm

The hardness ≥ 150 HV1 and ≤ 220 HV1

PTFE

Agom uses only virgin PTFE without regenerated or filler materials.

The minimum thickness of PTFE is 4.5 mm and varies in according with the bearings size.

Characteristics	Test method	Requirements
Tensile strength (MPa)	ISO 527-1/3	≥ 29
Elongation at break (%)	ISO 527-1/3	≥ 300
Hardness	EN ISO 2039-1	H132/60=23 to 33 MPa

Friction of the bearings

The reaction of the bearing to the movement can be mathematically calculated by considering friction coefficient between stainless steel and PTFE, the design friction values are in according to EN 1337-2 section 6.7.

Ferrous material for and piston:

The , the piston and if applicable the sliding plate are manufactured from ferrous material in accordance with EN 10025 standard.

Concrete pressure

According to EN 1337-7 the allowable concrete pressure depends on the relative dimensions of the bearing structure interface to the total support area and the characteristic strength of the concrete

Fixing types

Usually all the R-Max bearings are equipped with suitable anchor bars for anchoring purpose to lower and upper structure.

In case of pre-cast concrete beam the bearings can be provided with upper pin and top subsidiary plate; in case of steel beams the bearings shall be provided with upper pin and/or connecting bolts.

To adjust the angle of inclination of the superstructure, the bearing's top plate can be manufactured tapered or a wedge plate can be fixed at the top of the bearing.

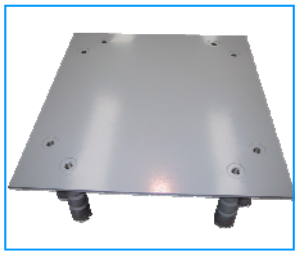

In case of horizontal loads < 20% of the simultaneous vertical load, if there is sufficient friction between the bearing and the sub or superstructure, the anchor bolts can be left out and the bearing can be connected to the structure by means of cementitius or epoxy resin (if the local code allow it).

To improve the R-Max bearings replacement with minimal up-lift of the structure, suitable Agom interconnecting quick devices QD are provided, as shown in the pictures.

Manufacturing and Quality

Agom R-Max bearings are designed and manufactured in accordance with the requirements of the new European standard EN 1337-7. Agom can also supply bearings complying with other standards. Every single component is mechanically worked and assembled by fully qualified and trained workers at the Agom factory with regular external inspections according to EN 1337 and under strict ISO 9001:2008 quality control standards.

Comprehensive Labelling

All the bearings are provided with a metal label detailing the proprieties of the bearings:

- bearing type
- maximum vertical and horizontal loads
- rotation
- order number
- date of manufacture

The top face of the bearing gives information on the type of the bearing, the direction of the axis of the bridge, the presetting (if any), the position.

Agom R-Max Bearings accessories

Movement indicator

The movement indicator allows the monitoring of the sliding bearing displacement by using a reference arrow fixed to the bearing base and a graduate indicator moving with the sliding plate. The movement indicator allow to check the initial presetting of the bearing (if required) and to verify the bearing motion during the future inspections.

Reference surfaces

According to EN1337 code the bearing can be provided with "reference surfaces" to ensure the perfect horizontal position during bearing installation. The lower reference surface is parallel to the bearing base and the upper one to the upper plate. In this way is possible to check the horizontal alignment of the two reference surfaces by means of suitable water levels and to obtain the perfect horizontal position of the bearing during installation.

Dust protection

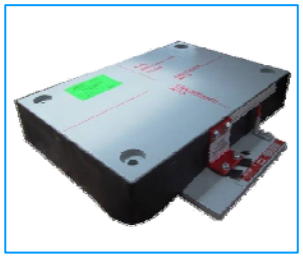

The dust protection around the sliding plate ensure the cleaning of the sliding surfaces to minimize the friction during sliding and guarantee the durability of the PTFE sliding material.

Corrosion protection

Steel components exposed to the elements are protected against corrosion. Agom adapts the corrosion protection in accordance to the aggressiveness of the environment in which the bearings are to be installed and to each customer's requirements.

The standard corrosion protection according EN 1337-9 is as follows:

- sandblasting SA2.5 grade
- two components high thickness epoxy zinc paint:
  250 µm

The high resistant corrosion protection (metallization) is as follow:

- sandblasting SA 2.5 grade
- metal spraying to 85 µm with Zn/Al 85/15
- sealing: Epoxy sealer 20-25 µm
- top coat: Polyurethane paint 100 µm

Guidelines for the design of a structure with Agom R-Max bearings

In this section a simple guideline for the design of a structure equipped with Agom bearing is presented, the design procedure is summarized in the following steps:

1. Selection of the structure static link scheme (fixed and movable support bearings)

2. Calculation of the loads (vertical and horizontal) on the bearings according to the fixity scheme

3. Calculation of the bearing rotations and movements

4. Insert all the bearing design data in to the bearing design table (example table B.1 of the EN1337-1 code attached at the end of the document)

5. Using the bearing drawings provided by Agom design the interface parts between structure and bearings as: bearing lower plinth with adequate position for installing the bearing anchor bars, level of the plinth to fit the vertical space between lower and upper structure to place the bearing and the upper structure interface where the bearing upper plate will be positioned

6. By using the spherical bearings the slope of the bridge deck can be easily taken without any compensator normally required by other type of bearings. By spherical bearing the rotation capacity can be increased to reach the required values due deck slope plus the additional structure permanent and live rotation. With standard R-Max bearings normally a permanent slope of 0.01 rad can be directly compensated by the bearing rotation, in any case the value can be increased according to the requirements.

DESIGN OF A STRCTURE WITH R-Max BEARINGS

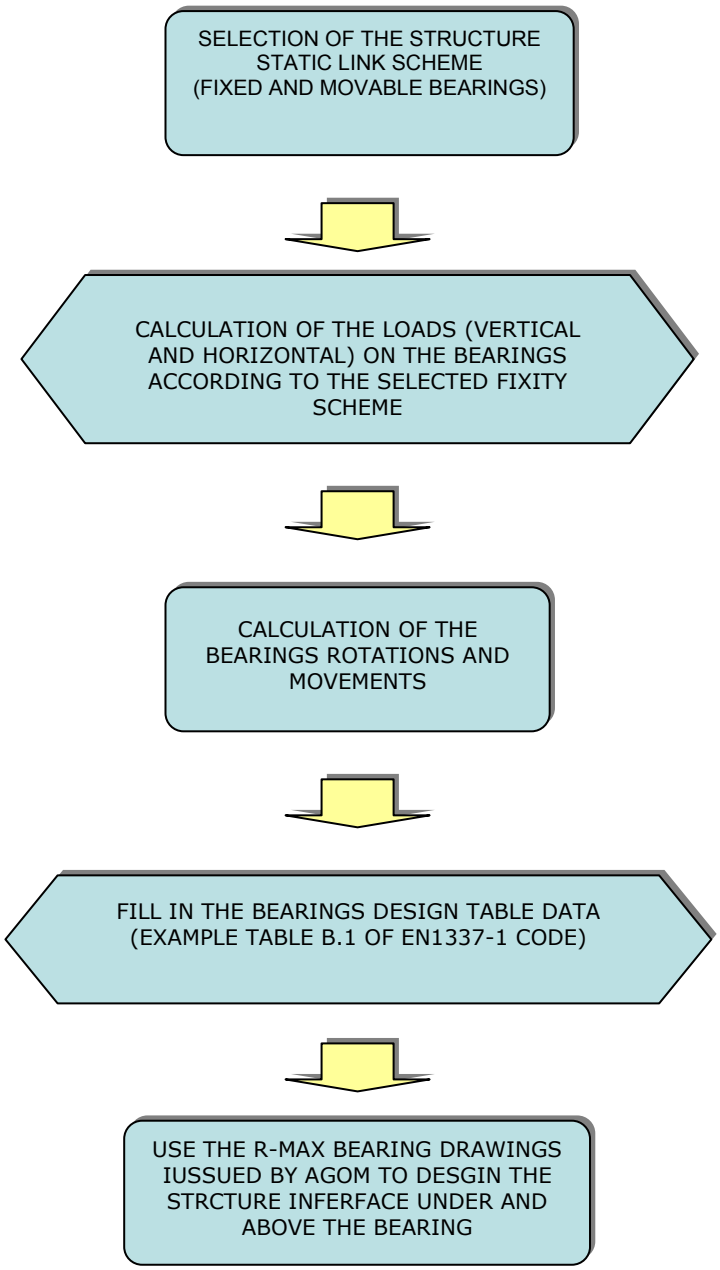

Comparison of bearings performances

	V-MAX **pot** bearing	**R-MAX** **spherical** bearing	**E-LINK** **rubber** bearings
Vertical load	High	High	Medium
Horizontal displacement	No Limits	No Limits	Medium
Rotation	Medium	High	Low-Medium
Dimension	Small-Medium	Small-Medium	High

Advantages of using Agom R-Max bearings

The Agom R-Max bearings fulfil the following requirements:

a. Transmit the vertical loads due to permanent and accidental effects; it is possible to cover a **wide range of loads about up from 500 to 100000 kN**

b. Transmit the horizontal loads with in practise no limitation of the design load

c. Allow rotation as per a spherical hinge. The standard design rotation

(±0.02 rad) can be easily increased to compensate structure slopes

d. No limitation for **of horizontal displacement**

e. Suitable for all structures steel and concrete bridges and buildings

f. **High durability and easy maintenance**

$N_{ed, max}$ UP TO 100000 kN

NO LIMITS HORIZONTAL LOADS

NO LIMITS HORIZONTAL DISPLACEMENT

HIGH DURABILITY NO MAINTAINANCE

R-Max features

All the structural parts of the bearing are made of S355JR steel with yield strength of steel 355 Mpa according to EN10025 code. If required other structural steel can be used for design and manufacturing. The sliding surfaces are obtained by coupling PTFE and stainless steel according to EN1337-2 code.

Handling and storage installation and maintenance

This manual gives the main list of the most important operations to correctly install the AGOM bridge bearings.

Under control of the Engineer who designed the bridge, bearings must be installed by expert workers, with precision to meet the bridge and bearing design criteria.

Inappropriate handling, storage and installation will have an adverse effect on the bearing life, usually estimated in more than 50 years providing right maintenance.

AGOM structural bearings are manufactured to close tolerances by skilled technicians working in clean conditions.

To obtain the requisite performance from bearings it is imperative that they are properly handled at the work site and installed with the same care as when they were assembled in the factory.

AGOM bearings are clearly identified and marked on the top plate to ensure correct installation. The typeface on the cover or sliding plate gives information on the type, size and number of the bearing. Moreover, arrows indicate the movement axis and the presetting direction (if applicable).

Every bearing is provided with a steel identification label with all the most important bearing information

Handling and storage

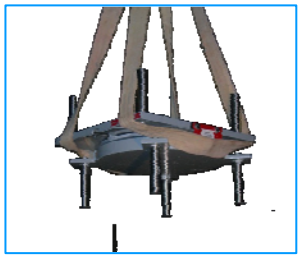

Care should be taken in storage to prevent contamination and damage to the working surfaces. AGOM bearings should be stored in a controlled environment where they are protected from contamination, misuse and excessive moisture.

Robust transportation devices are fitted to all bearings to ensure that the components are maintained in they correct relative positions before and during installation.
The devices are normally finished in red paint.

Unless special devices have been specified, they should not be used for slinging or suspending the bearings beneath beams.
Due to unpredictable conditions, which may occur during transportation or handling on site, the alignment and presetting (if applicable) of the assembled bearing should be checked against the drawing.
Do not try to rectify any discrepancies on site.
Bearing too heavy to be lifted by hand should be properly slung using lifting equipment.

Presetting

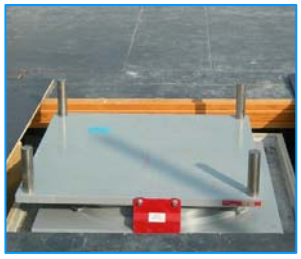

If bearing are required to preset eg. where once only large movements may occur during stressing operations, this should be specified as a requirement and should only be carried out in AGOM prior to despatch.
Do not attempt this operation on site.

Installation

The installation procedure of the bearings generally depends on the structure type. The main steps are:

1. Check before installation.
In order to avoid placements mistakes of the bearings, all the technical and description data, printed on the label, shall be checked and compared with the ones showed in the shop drawings.

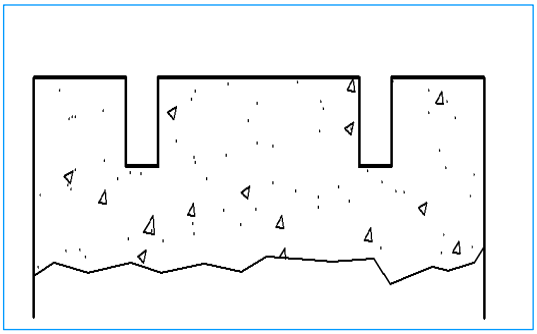

2. Casting of the substructures.
Substructures shall reach a level about 30 mm lower then the final level.

In order to install the bearings suitable voids spaces must be provided to insert the bearing lower anchor bars.
An easy way to leave the voids is to use corrugated steel pipes grouted into the concrete with a diameter at least double compared with the diameter of the anchor bars.

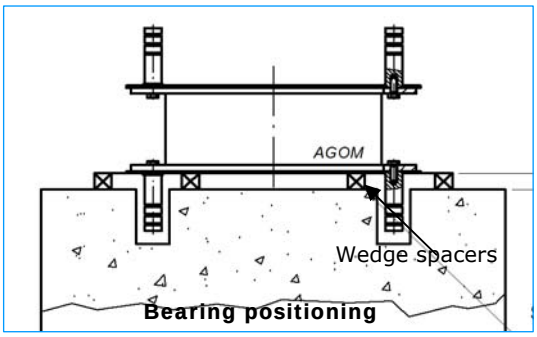

Bearing positioning

3. Bearing positioning and substructure casting.
The bearings are placed at the final exact level supporting it by temporary wedge spacers; the maximum deviation from the horizontal plan does not exceed 0.001 radians.

In order to fix the bearings and anchor bars a formwork around the lower base plate must be provided (normally a wood or steel formwork is used).

To grout the bearing a high strength non-shrink, quick setting cement mortar with compression strength > 45 Mpa has to be used; if the thickness of the mortar exceeds 40 mm a suitable reinforcement shall be provided.

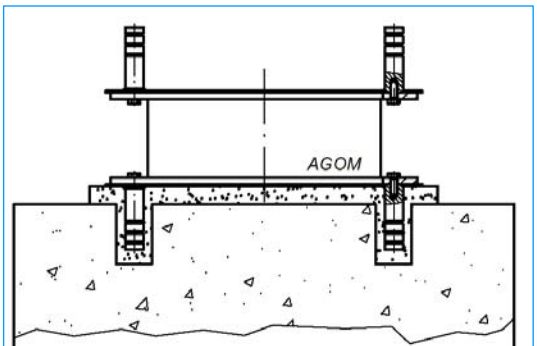

Substructure casting

The temporary wedges used to keep the bearing in right position shall be removed after mortar hardening and remaining voids shall be filled by the same mortar.

The level of the cement mortar shall not exceed bottom level of the bearings steel lower plate to avoid bearings embedding compromising the eventual future bearing replacement.

4. Casting of the superstructure – cast-in-situ superstructure

Superstructure formwork must be arranged around the bearing upper steel plate and sealed with adhesive tape or foam to avoid concrete leakage during casting.

The formwork must be arranged in a suitable way to avoid embedding of the bearing upper plate into concrete to avoid bearing embedding compromising the eventual future replacement. The formwork must be supported at the design level during concrete pouring.

When the concrete has reached adequate resistance the supports and formwork have to be removed. At the end of the construction the bearings must be cleaned and the painting of the steel plates repaired if some damages occurred during construction.

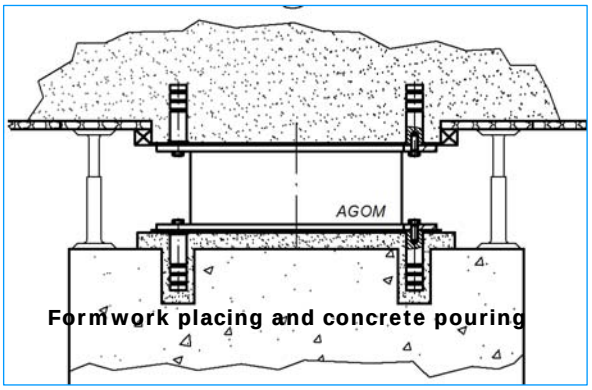

Formwork placing and concrete pouring

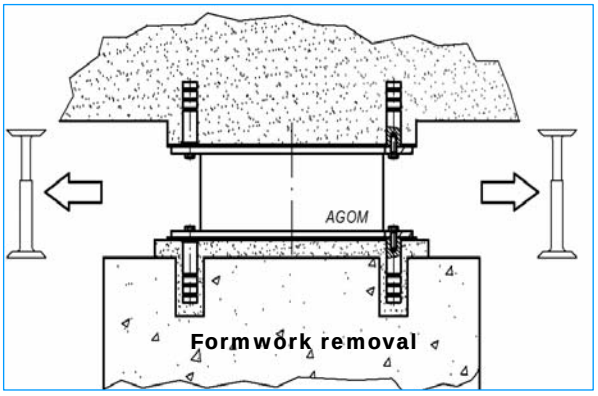

Formwork removal

5. Casting of the superstructure - prefabricated superstructure

The bearings normally have upper anchorages that must be inserted into the suitable voids of the prefabricated structure.

After the prefabricated beam has been placed in the final position (the beam must be supported on temporary supports), the bearing upper plate must be surrounded by a seal (normally rubber seal with suitable injection and leakage pipes).

The gap and anchorages voids between plate and beam have to be filled by high strength mortar.

When the mortar has achieved sufficient strength to transmit the weight of the bearings; the temporary supports shall then be removed.

At the end of the construction the bearings must be cleaned and the painting of the steel plates repaired if some damages occurred during construction.

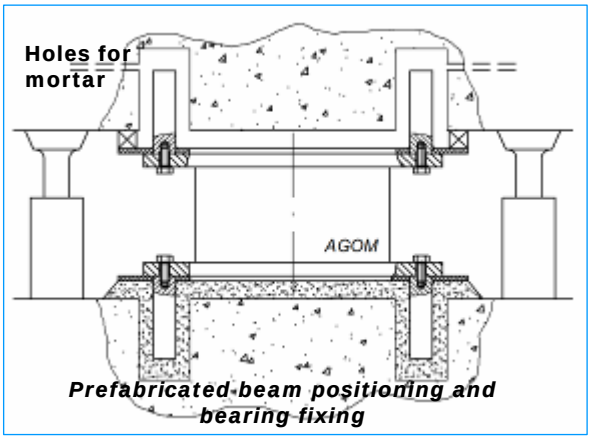

Prefabricated beam positioning and bearing fixing

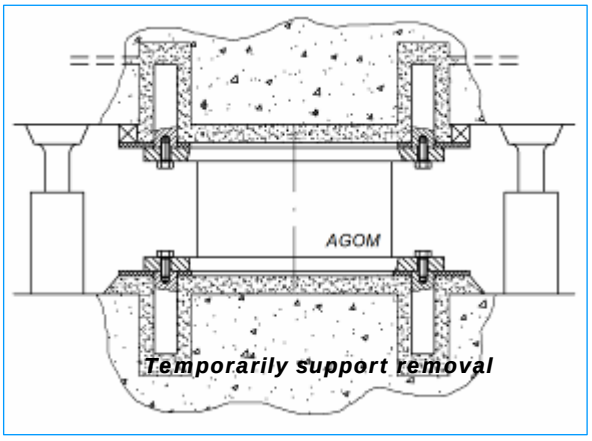

Temporarily support removal

Removal of transport devices

The transport devices, normally painted red should only be removed when the bearing is properly installed and ready for operation.

Any tapped holes exposed after removal of transportation brackets etc (coloured red) should be sealed with self-vulcanizing silicon sealant.

Maintenance of Bearings

The service life of a bearing is usually estimated in more than 50 years.
The most important thing to assure such a long life time is a correct and careful maintenance of the bearing, that is usually installed in a severe environment.

The requested bearing inspection and maintenance program that could be adapted and improved by the bridge designer to the specific service conditions of the bridge is fully described in the "Inspection and warranty manual" that can be download from Agom web site www.agom.it .

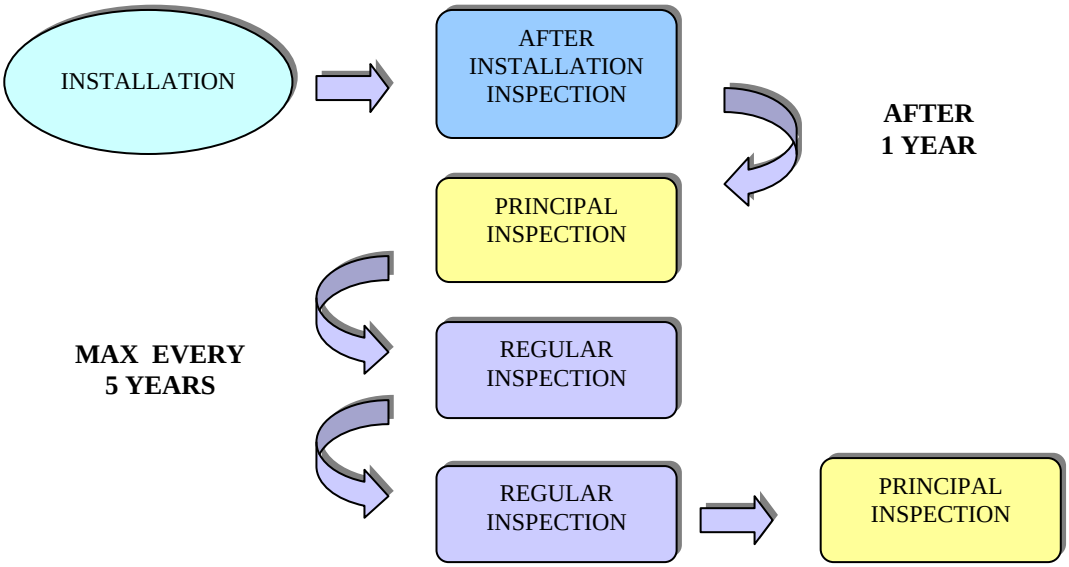

A typical complete routine check of the bearing installed should be comprehensive of the following activities.

- Paint and other specified protective coatings must be maintained in good and efficient condition and free from scratches or chips. Any areas of the protective coating showing damage or distress must be rectified as soon as it is seen
- Area surrounding the bearings must be kept clean and dry and free from the adverse effects of external influences such as airborne debris or water/salt (for example flow out from leaking joints)
- The wearing surfaces of the bearing must be checked to ensure that they are continuing to operate efficiently. Where possible seals should be checked to ensure that they are undamaged
- Fixing bolts must be checked for tightness.
  Any bedding material showing signs of distress or ineffectiveness must be replaced and the reason for its failure investigated and corrected
- Routine inspections shall include a check that translational and rotational capacities of the bearing have not been exceeded and show no sign of being likely to exceeded the requirements specified at the design stage.
- PTFE discs should be within limits of their design movement and have at least 1 mm thickness of material visible. Excess movement will be evident if the PTFE disc have moved outside the limits of the stainless steel slider plate

Agom R-Max bearing with special devices

The Agom R-Max bearings can be combined with special devices as:

- hydraulic devices
- antilifting system
- vertical load measurement tool
- elastic devices

Agom R-Max bearing combined with hydraulic devices

The hydraulic devices that can be combined with Agom R-Max bearing are of two types:

- Hydraulic device type shock transmitter (ST).
It allows the slow movement (velocity < 0.1 mm/sec) due to service conditions (thermal, shrinkage, fluage) while it blocks in case of fast motion (seismic etc..) and transmits the horizontal load along the device axis.

- Hydraulic device type viscous damper (VD).
It allows the slow movement (velocity < 0.1 mm/sec) due to service conditions (thermal, shrinkage, fluage) while it reacts in case of fast motion (seismic etc..); it reaches the design load and allows the motion dissipating energy. It works as a viscous damper with very high damping capacity (higher than 50% of the critical damping); the response cycles in term of force-displacement and force-velocity can be adjusted according to the structural designer requirements.

The Agom R-Max bearings combined with hydraulic devices are available of two types:

- longitudinal guided bearings with hydraulic shock transmitter AGSL ST; it allows rotations of a spherical hinge and the horizontal displacement in the longitudinal direction for slow motion; it carries the vertical load ,the horizontal load along the transversal direction and the longitudinal one due to dynamic actions
- free sliding bearing with hydraulic shock transmitter AGSM ST; it allows rotations of a spherical hinge and the horizontal displacement along each direction of the horizontal plane for slow motions; it carries the vertical load and the longitudinal one due to dynamic actions
- longitudinal guided bearings with hydraulic shock transmitter AGSL VD; it allows rotations of a spherical hinge and the horizontal displacement in the longitudinal direction for slow motion; it carries the vertical load ,the horizontal load along the transversal direction and the longitudinal one due to dynamic actions with very high energy dissipation
- free sliding bearing with hydraulic shock transmitter AGSM VT; it allows rotations of a spherical hinge and the horizontal displacement along each direction of the horizontal plane for slow motions; it carries the vertical load and the longitudinal horizontal one due to dynamic actions with very high energy dissipation

Agom R-Max bearing combined with antilifting system

The Agom R-Max bearing can be equipped with antilifting tool in order to absorb the negative tensile vertical forces. The antilifting tools can be applied to all the R-Max bearings (fixed, guided and free sliding) with different systems depending on the bearing type, tensile load value and required rotation.
It is possible to cover a very wide range of tensile loads by suitable design of antilifting tools.
An example of R-Max bearing combined with antilifting tools is shown in the following figure:

Agom R-Max bearing with vertical load measurement

The Agom R-Max bearing can be equipped with a system to measure the vertical load acting on the bearing. It can be useful to verify the effect of transient loads on bearings (example traffic on bearings) or to check the structure behaviour in case of foundations settlements. The load measurement can be registered near the bearing or by remote acquisition depending of the adopted data acquisition system.

Agom R-Max bearing with horizontal elastic stiffness

The Agom R-Max bearing can be equipped with elastic tools in order to provide an elastic horizontal response. The elastic response in the horizontal direction (one or two directions) can be useful for particular applications (example bridge with very high curvature to minimize the parasite effects due to the bearing guide alignments or to equalize the horizontal forces between bearings).
An example of R-Max bearing combined with elastic tools is shown in the following figure:

Agom R-Max design parameters

Normally the required input parameters that the structural designer has to provide to Agom engineers for device design and constructions are the one of the bearing design table for example the table B.1 of EN1337-1 code (attached at the end of this document):

Maximum vertical load and horizontal loads (when allowed)	$N_{Sd,max}$ V_{Sd}
Minimum vertical load	$N_{Sd,min}$
Bearing design rotation (seismic, thermal, irreversible movements)	α_d
Bearing design displacement (seismic, thermal, irreversible movements)	$v_{,d}$
Bearing lower and upper interface surface with the structure (available space for bearing installation, material and design resistance)	σ_c, A,B

Agom R-Max standard range

The Agom R-Max bearings can cover a very wide range of loads and displacements, they can be designed according to many international standards (European code EN 1337 relevant parts, American AASHTO LRFD, British BS5400, etc..).

The bearings dimensions shown in the following tables have been designed according to European codes with the following criteria:

- EN 1337 part 1 and relevant European codes for load and displacements calculation. Note that the bearing design loads (shown in the tables) are ultimate limit state loads (ULS) according to European codes
- EN 1337 part 7 and 2 for sliding surface
- Standard rotation 0.02 rad
- Displacement 100 mm (±50 mm)
- Horizontal load equal to 15% of the maximum vertical one
- Concrete stress calculated according to EC2 - EN1992-1-1 standard with concrete class C30/37, levelling mortar with minimum compression resistance f_c = 45 N/mm2 and plinth size at least 100 mm greater that bearing plate

In any case the dimension can be adjusted to fit the available space on the structure and/or to verify the contact stress on the interface surface (example different concrete class respect to the one used for the bearing standard design, etc..)
In the following the overall dimension for fixed, guided and free sliding bearings are presented.

Since the bearings checks depends on the combination of multiple inputs (load, displacement and rotation) the Agom engineers can assist the structural designer for design optimisation.

In the following the overall dimension of a wide range of the Agom R-Max bearings are shown. In the table the fixed bearing with three plates and the guided one with external steel plates are presented.

Agom R-Max Fixed Bearings

In the fixed bearing table the following symbols apply:

- Fixed bearing type AGSF(vertical load, horizontal longitudinal load, horizontal transversal load) = example AGSF 500-75-75 means vertical load $N_{,Rd}$= 500 kN, horizontal longitudinal load $V_{x,Rd}$ = 75 kN, horizontal transversal load $V_{y,Rd}$ = 75 kN
- Φ_B = bearing base diameter
- H = bearing height
- W = bearing weight without anchor bars

Bearing type	$N_{,Rd}$ (kN)	$V_{x,Rd}$ (kN)	$V_{y,Rd}$ (kN)	Φ_B (mm)	H (mm)
AGSF 500-75-75	500	75	75	180	80
AGSF 1000-150-150	1000	150	150	240	85
AGSF 1500-225-225	1500	225	225	280	95
AGSF 2000-300-300	2000	300	300	320	100
AGSF 2500-375-375	2500	375	375	360	105
AGSF 3000-450-450	3000	450	450	390	110
AGSF 4000-600-600	4000	600	600	450	115
AGSF 5000-750-750	5000	750	750	500	125
AGSF 6000-900-900	6000	900	900	550	130
AGSF 7000-1050-1050	7000	1050	1050	580	135
AGSF 8000-1200-1200	8000	1200	1200	620	145
AGSF 9000-1350-1350	9000	1350	1350	660	150
AGSF 10000-1500-1500	10000	1500	1500	690	160
AGSF 11000-1650-1650	11000	1650	1650	720	165
AGSF 12000-1800-1800	12000	1800	1800	760	175
AGSF 13000-1950-1950	13000	1950	1950	790	180
AGSF 14000-2100-2100	14000	2100	2100	820	185
AGSF 15000-2250-2250	15000	2250	2250	850	195
AGSF 16000-2400-2400	16000	2400	2400	880	195
AGSF 17000-2550-2550	17000	2550	2550	900	200
AGSF 18000-2700-2700	18000	2700	2700	940	205
AGSF 19000-2850-2850	19000	2850	2850	950	210
AGSF 20000-3000-3000	20000	3000	3000	980	215
AGSF 25000-3750-3750	25000	3750	3750	1100	230
AGSF 30000-4500-4500	30000	4500	4500	1190	245
AGSF 40000-6000-6000	40000	6000	6000	1380	270
AGSF 50000-7500-7500	50000	7500	7500	1540	300
AGSF 60000-9000-9000	60000	9000	9000	1680	320
AGSF 70000-10500-10500	70000	10500	10500	1830	345
AGSF 80000-12000-12000	80000	12000	12000	1970	360
AGSF 90000-13500-13500	90000	13500	13500	2090	375
AGSF 100000-15000-15000	100000	15000	15000	2210	390

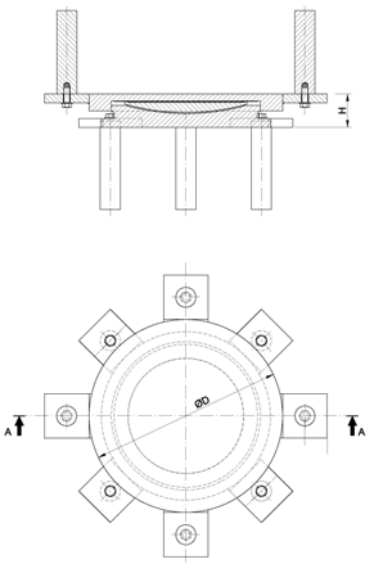

Agom R-Max Guided Bearings

In the guided bearing table the following symbols apply:

- Guided bearing type AGSL(vertical load, horizontal longitudinal movement, horizontal transversal load) = example AGSL 500/100-75 means vertical load = 500 kN, horizontal longitudinal movement $v_{x,d}$ = 100 (±50) mm , horizontal transversal load $V_{y,Rd}$ = 75 kN. In case of AGST bearing the movement is along transversal axis and the horizontal load along the longitudinal one.
- The size B_x of the sliding plate is for the 100 mm movement, for different stroke the formula to calculate the right size of the plate is: $B^*_x = B_x + v - 100$ (with δ = the total design movement)
- B = bearing base size
- H = bearing height
- W = bearing weight without anchor bars

Bearing type	$N_{,Rd}$ (kN)	$v_{x,d}$ (mm)	$V_{y,Rd}$ (kN)	B (mm)	H (mm)	B_x (mm)	B_y (mm)
AGSL 500/100-75	500	100	75	150	75	250	210
AGSL 1000/100-150	1000	100	150	200	80	300	260
AGSL 1500/100-225	1500	100	225	250	95	350	310
AGSL 2000/100-300	2000	100	300	290	100	390	350
AGSL 2500/100-375	2500	100	375	320	110	420	400
AGSL 3000/100-450	3000	100	450	350	120	450	430
AGSL 4000/100-600	4000	100	600	400	125	500	480
AGSL 5000/100-750	5000	100	750	450	140	550	530
AGSL 6000/100-900	6000	100	900	490	145	590	590
AGSL 7000/100-1050	7000	100	1050	530	160	630	630
AGSL 8000/100-1200	8000	100	1200	570	165	670	670
AGSL 9000/100-1350	9000	100	1350	600	170	700	710
AGSL 10000/100-1500	10000	100	1500	640	185	740	750
AGSL 11000/100-1650	11000	100	1650	670	190	770	780
AGSL 12000/100-1800	12000	100	1800	700	195	800	820
AGSL 13000/100-1950	13000	100	1950	720	205	820	840
AGSL 14000/100-2100	14000	100	2100	750	215	850	870
AGSL 15000/100-2250	15000	100	2250	780	220	880	910
AGSL 16000/100-2400	16000	100	2400	800	220	900	930
AGSL 17000/100-2550	17000	100	2550	830	225	930	970
AGSL 18000/100-2700	18000	100	2700	850	235	950	990
AGSL 19000/100-2850	19000	100	2850	870	245	970	1010
AGSL 20000/100-3000	20000	100	3000	900	245	1000	1060
AGSL 25000/100-3750	25000	100	3750	1000	265	1100	1160
AGSL 30000/100-4500	30000	100	4500	1100	280	1200	1260
AGSL 40000/100-6000	40000	100	6000	1270	310	1370	1450
AGSL 50000/100-7500	50000	100	7500	1420	340	1520	1600
AGSL 60000/100-9000	60000	100	9000	1550	360	1650	1730
AGSL 70000/100-10500	70000	100	10500	1670	385	1770	1870
AGSL 80000/100-12000	80000	100	12000	1790	400	1890	1990
AGSL 90000/100-13500	90000	100	13500	1900	430	2000	2120
AGSL 100000/100-15000	100000	100	15000	2000	445	2100	2220

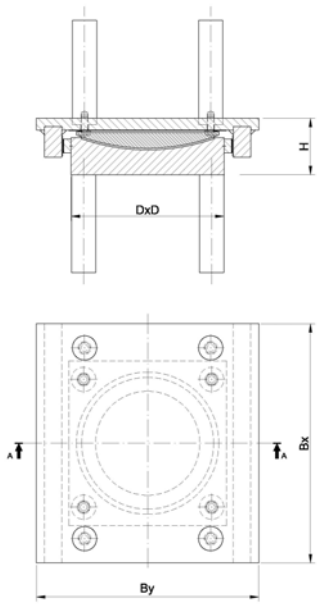

Agom R-Max Free Sliding Bearings

In the free sliding bearing table the following symbols apply:

- Guided bearing type AGSM(vertical load, horizontal longitudinal movement, horizontal transversal movement) = example AGSL 500/100/20 means vertical load = 500 kN, horizontal longitudinal movement $V_{x,d}$ = 100 (±50) mm , horizontal transversal movement $V_{y,d}$ = 20 (±10) mm .
- The size B_x of the sliding plate is for the 100 mm movement, for different stroke the formula to calculate the right size of the plate is: $B^*_x = B_x + v - 100$ (with δ = the total design movement)
- Φ_B = bearing base diameter
- H = bearing height
- W = bearing weight without anchor bars

Bearing type	$N_{,Rd}$ (kN)	$V_{x,d}$ (mm)	$V_{y,d}$ (mm)	Φ_B (mm)	H (mm)	B_x (mm)	B_y (mm)
AGSM 500/100/20	500	100	20	150	70	250	150
AGSM 1000/100/20	1000	100	20	200	75	300	200
AGSM 1500/100/20	1500	100	20	250	90	350	250
AGSM 2000/100/20	2000	100	20	290	95	390	290
AGSM 2500/100/20	2500	100	20	320	100	420	320
AGSM 3000/100/20	3000	100	20	350	105	450	350
AGSM 4000/100/20	4000	100	20	400	115	500	400
AGSM 5000/100/20	5000	100	20	450	125	550	450
AGSM 6000/100/20	6000	100	20	490	135	590	490
AGSM 7000/100/20	7000	100	20	530	140	630	530
AGSM 8000/100/20	8000	100	20	570	145	670	570
AGSM 9000/100/20	9000	100	20	600	150	700	600
AGSM 10000/100/20	10000	100	20	640	155	740	640
AGSM 11000/100/20	11000	100	20	670	165	770	670
AGSM 12000/100/20	12000	100	20	700	175	800	700
AGSM 13000/100/20	13000	100	20	720	180	820	720
AGSM 14000/100/20	14000	100	20	750	185	850	750
AGSM 15000/100/20	15000	100	20	780	190	880	780
AGSM 16000/100/20	16000	100	20	800	190	900	800
AGSM 17000/100/20	17000	100	20	830	195	930	830
AGSM 18000/100/20	18000	100	20	850	200	950	850
AGSM 19000/100/20	19000	100	20	870	205	970	870
AGSM 20000/100/20	20000	100	20	900	210	1000	900
AGSM 25000/100/20	25000	100	20	1000	230	1100	1000
AGSM 30000/100/20	30000	100	20	1100	245	1200	1100
AGSM 40000/100/20	40000	100	20	1270	275	1370	1270
AGSM 50000/100/20	50000	100	20	1420	300	1520	1420
AGSM 60000/100/20	60000	100	20	1550	330	1650	1550
AGSM 70000/100/20	70000	100	20	1670	350	1770	1670
AGSM 80000/100/20	80000	100	20	1790	370	1890	1790
AGSM 90000/100/20	90000	100	20	1900	385	2000	1900
AGSM 100000/100/20	100000	100	20	2000	400	2100	2000

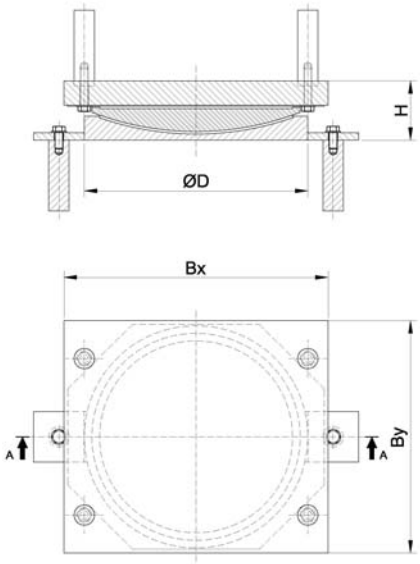

Bearing design table according to EN1337-1 code

The purpose of this bridge bearing schedule is to list the information normally required for the design of the bearings for a particular structure. This information should ensure that bearings are designed and manufactured so that, under the influence of all possible actions, unfavourable effects of the bearing on the structure are avoided. A drawing should accompany the schedule showing the layout of the bearings with identification marks, including a typical cross section of the bridge and particular of any special locating requirements. Bearing function should be indicated on the drawing by appropriate symbols.

Every item listed in the "bearing design table" should be considered, but some may not be applicable to a particular bearing. Only relevant information should be given and when an item in the schedule is not applicable this should be stated. Additional information should be added when special conditions exist.

Here above you can find a short explanation of each item listed in the "bearing design table"

BEARING IDENTIFICATION MARK	Bearing with different function or load carrying requirements should be distinguished by a unique reference mark
NUMBER OFF	The required number for each item
SEATING MATERIAL	The materials on which each outer bearing plate bears should be stated as it may affect the design and finish of these plates
AVERAGE DESIGN CONTACT PRESSURE	The pressure of the effective contact area
DESIGN LOAD AFFECTS	The structure designer should give the worst individual values of the design load effects in the schedule. The most adverse combination of these values is usually sufficient for a satisfactory design of bearing. Only in special cases would greater economy be achieved by considering the actual coexistent values of load effects, in which case these should be given in detail.

DISPLACEMENT	Displacement of the structure at a bearing should be determined and factored. Allowance should be made for any movement of the supporting structures. Transverse and longitudinal movements are normally in a direction perpendicular and parallel to the longitudinal axis of a bridge span, respectively. Where there is any likelihood of ambiguity directions of movement should be clearly indicated on the accompanying drawing.
ROTATION	The irreversible and reversible rotations at the serviceability limit state (SLS), which the bearing is required to accommodate, should be given in radians. In the case of elastomeric bearings the maximum rate should be given.: 100x(rotation [rad]/coexisting design vertical load [kN])
MAXIMUM BEARING DIMENSIONS	The maximum sizes of the bearing that can be accommodated should be stated
TOLERABLE MOVEMENT OF BEARING UNDER TRANSIENT LOADS	The movement that can be tolerated at the bearing under transient loads, in directions in which the bearing is meant to provide restraint
ALLOWABLE RESISTANCE TO TRASLATION UNDER SLS [kN.] (if relevant)	In the design of the structure, reaction to displacement movements may be of significance, in which case the acceptable horizontal force generated by the bearing should be given for the serviceability limit state (SLS). The values to be given are those for slowly applied movements at normal temperatures (any necessary extra allowance for low temperatures and rapidly applied movements should be made by the designer of the structure).
ALLOWABLE RESISTANCE TO ROTATION UNDER SLS [kN*m] (if relevant)	In the design of the structure, reaction to rotation may be of significance in which case the acceptable moment of reaction generated by the bearing, when subjected to the critical design load effects, should be given for the serviceability design state.
TYPE OF FIXING REQUIRED	Various means of fixing the bearing to the superstructure and substructure are available, appropriate to different type of bearing. Particular requirements, such as friction, bolts, dowels, keys or other devices, should be stated.

Bearing Design Table

Reference:……. **Date:…….**

Bridge Name: ……. **Table: …….. of ……..**

BEARING IDENTIFICATION MARK						
NUMBER OFF						
SEATING MATERIAL (e.g. cement, mortar, epoxy mortar, in situ concrete, precast concrete, steel, timber.)	Upper surface					
	Lower surface					
AVERAGE DESIGN CONTACT PRESSURE [N/mm^2]	Upper face	SLS				
		ULS				
	Lower face	SLS				
		ULS				
DESIGN LOAD AFFECTS [kN]	ULS	vertical	Max			
			Permanent			
			Min.			
		Transverse				
		Longitudinal				
	SLS	Vertical				
		Transverse				
		Longitudinal				
DISPLACEMENT [mm]	ULS	Transverse				
		Longitudinal				
	SLS	Transverse				
		Longitudinal				
ROTATION	ULS	Transverse				
		Longitudinal				
MAXIMUM BEARING DIMENSIONS [mm]		Transverse				
		Longitudinal				
		Overall Height				
TOLERABLE MOVEMENT OF BEARING UNDER TRANSIENT LOADS [mm] (If relevant)		Vertical				
		Transverse				
		Longitudinal				
ALLOWABLE RESISTANCE TO TRASLATION UNDER SLS [kN.m] (if relevant)		Transverse				
		Longitudinal				
ALLOWABLE RESISTANCE TO ROTATION UNDER SLS [kN.m] (if relevant)		Transverse				
		Longitudinal				
TYPE OF FIXING REQUIRED		Upper face				
		Lower face				

AGOM
IDEAS, ENGINEERING AND MANUFACTURE

MORE THAN 40 YEARS EXPERIENCE DESIGNING AND MANIFACTURING DEVICES FOR CONSTRUCTION, OFFSHORE AND INDUSTRIAL MARKETS







Bridge bearings
- Elastomeric Bridge bearings
- bearings
- Spherical bearings
- Incremental Launching bearings
- Horizontal load bearings
- Special bearings

Seismic Isolators
- High damping rubber bearings
- Lead core rubber bearings
- Multilayer rubber bearings
- Shock transmitters
- Shock absorber
- Rubber dampers

Expansion joints
- Elastomeric joints
- Joints for high movements
- Finger joints
- Buried joints
- Railway joints

Services
- Design
- Consulting
- On site assistance
- Installations
- Tests
- Inspection

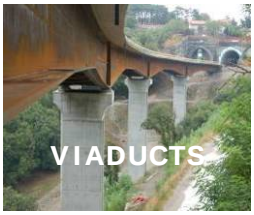


AGOM INTERNATIONAL SRL Via Mesero, 12 – 20010 Ossona (MI) - Italy
PH.:+39 02 9029111 – FAX:+39 02 9010201 www.agom.it - e-mail: agom@agom.it

ACCREDIA L'ENTE DI ACCREDITAMENTO
UNI EN ISO 9001:2008 CERTIQUALITY SISTEMA DI GESTIONE QUALITÀ CERTIFICATO
CERTIQUALITY È MEMBRO DELLA FEDERAZIONE CISQ IQNet
CE

Section 5

Agom R-Max spherical bearings

a) Catalogue
b) Technical data sheet
c) Drawings
d) Installation instructions

SIZE A2 594 x 420

AGOM INTERNATIONAL S.r.l.

R- Max Fixed Spherical Bearing
Position: -

Type	Q.ty	Code	Max. Design Loads [kN]			Movement [mm]		Total Rotation [mrad]	Weight [Kg]
			VERT.	HORIZ.	UPLIFTING	LONG.	TRANS.		
AGSF	1	EN 1337-7	SLS - ULS -	SLS - ULS -	-			-	-

AGOM International Reference: 09/01314 — Irreversible Rotation ± 14 mrad

SEC. N-N

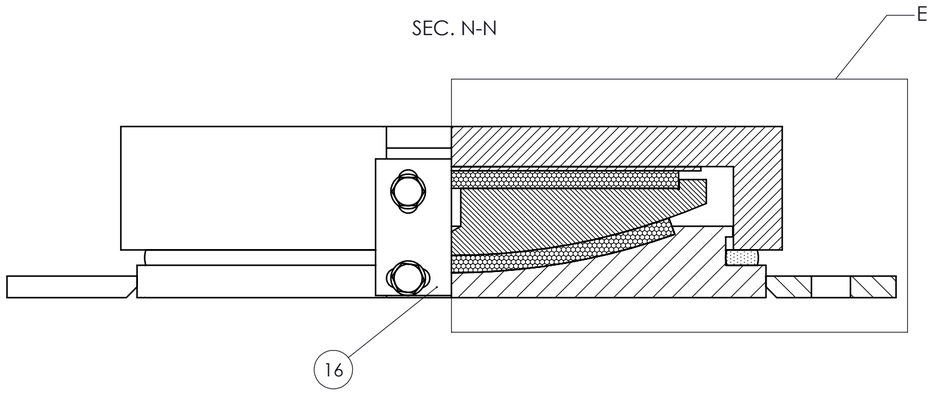

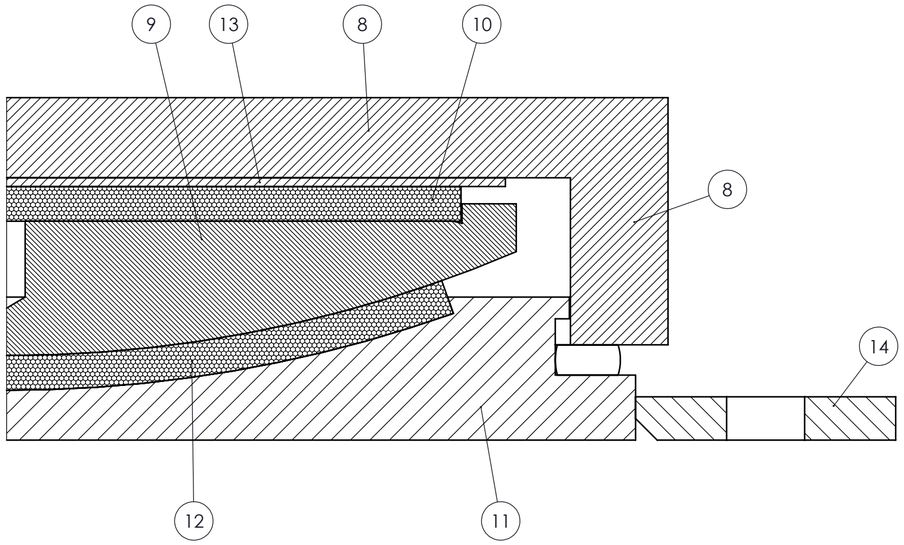

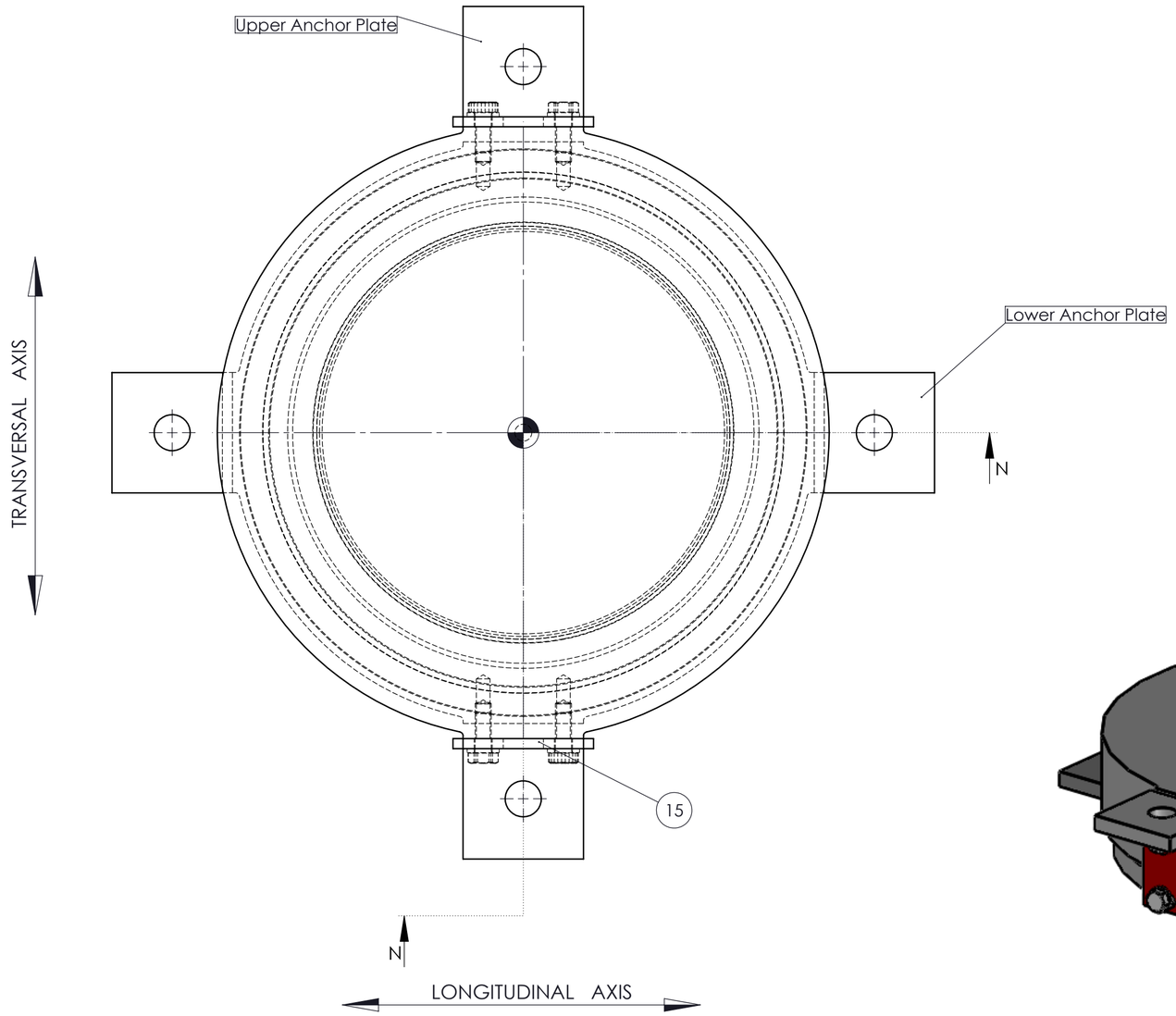

NOTE A: PROTECTIVE ANTICORROSION CYCLE ACCORDING TO EN 1337-9

1 Sand-blasting at white metal SA2.5

2 Bicomponent epoxidic covering at high thickness — Silver Grey color RAL7001

Minimum thickness dry film — a) Exposed surface: 250 micron

b) Worked surfaces and contact surfaces of concrete: 70 micron

NOTE C: CURVED MATING SURFACE WITH HARD CHROMIUM PLATING

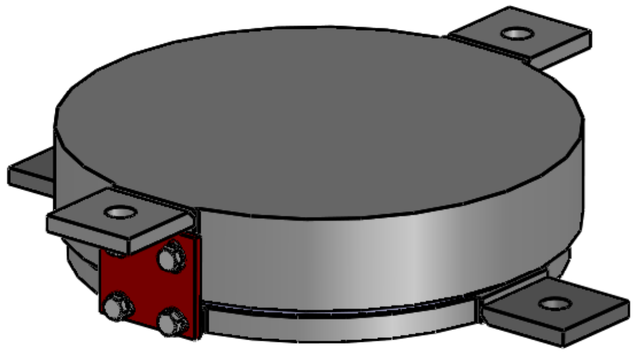

(*) Alternatively PTFE can also be used

Pos.	Quantity	Part Name	Material	Note
21	1	Seal	Neoprene Exp.	-
16	2	Removable Red Plate	S235JR (Red Painted) - EN10025	-
15	2	Upper Anchor Plate	S275JR - EN10025	A
14	2	Lower Anchor Plate	S275JR - EN10025	A
13	1	Flat Mating Surface	X5CrNiMo1712 - EN 10088-2	-
12	1	Curved Sliding Surface	AgomGlide®	(*)
11	1	Basament	S355JR - EN10025	A
10	1	Flat Sliding Surface	AgomGlide®	(*)
9	1	Middle Plate	S355J2G3 - EN10025	A
8	1	POT Bearing	S355JR - EN10025	A

Revision	Object	Date Last modified
00	FIRST ISSUE	23/03/2012

Drawn by	Checked by	Approved by
Gianni Ruco	Daniele Colombo	M.Battaini

AGOM IDEAS, ENGINEERING AND MANUFACTURE

AGOM INTERNATIONAL Srl
Via Mesero, 12
20010 Ossona (MI)

Fixed spherical bearing

R-Max AGSF

Drawing number	Scale
01383	1:2

SIZE A2 594 x 420

R- Max Guided Sliding Spherical Bearing
Position: -

Type	Q.ty	Code	Max. Design Loads [kN]			Movement [mm]		Total Rotation [mrad]	Weight [Kg]
			VERT.	HORIZ.	UPLIFTING	LONG.	TRANS.		
AGSL	1	EN 1337-7	SLS - ULS -	SLS - ULS -	-	-	-	-	-
AGOM International Reference: 09/01314									

SEC. S-S

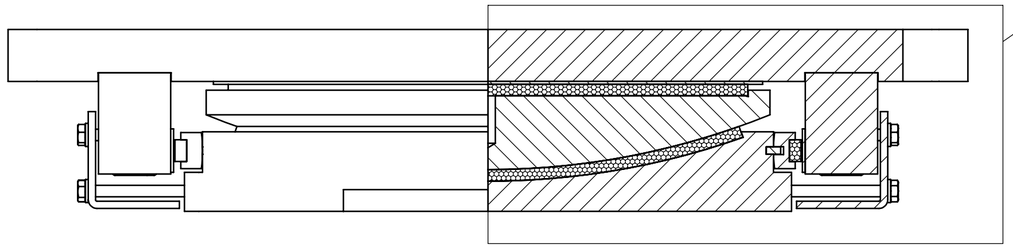

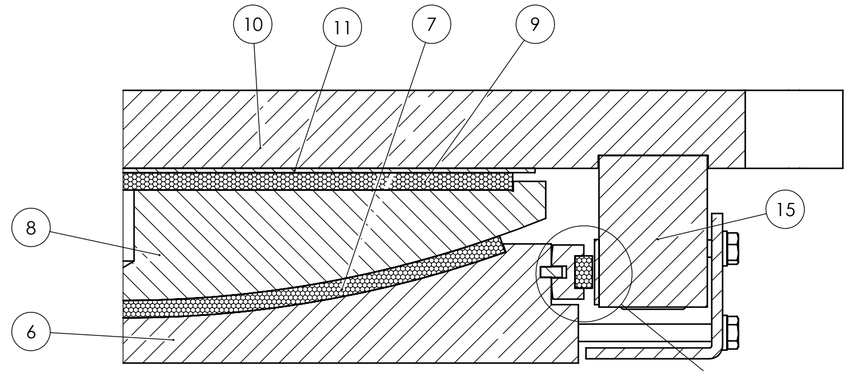

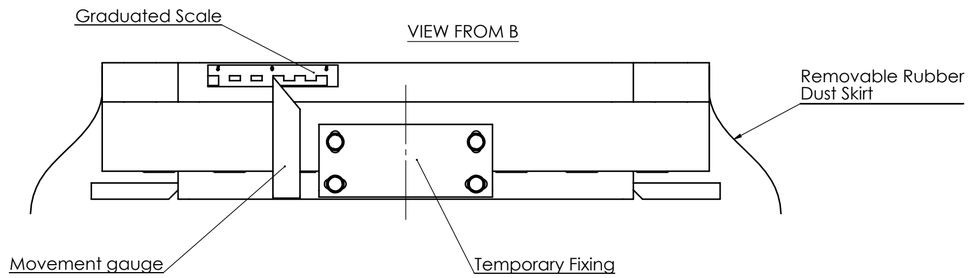

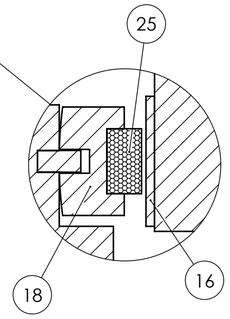

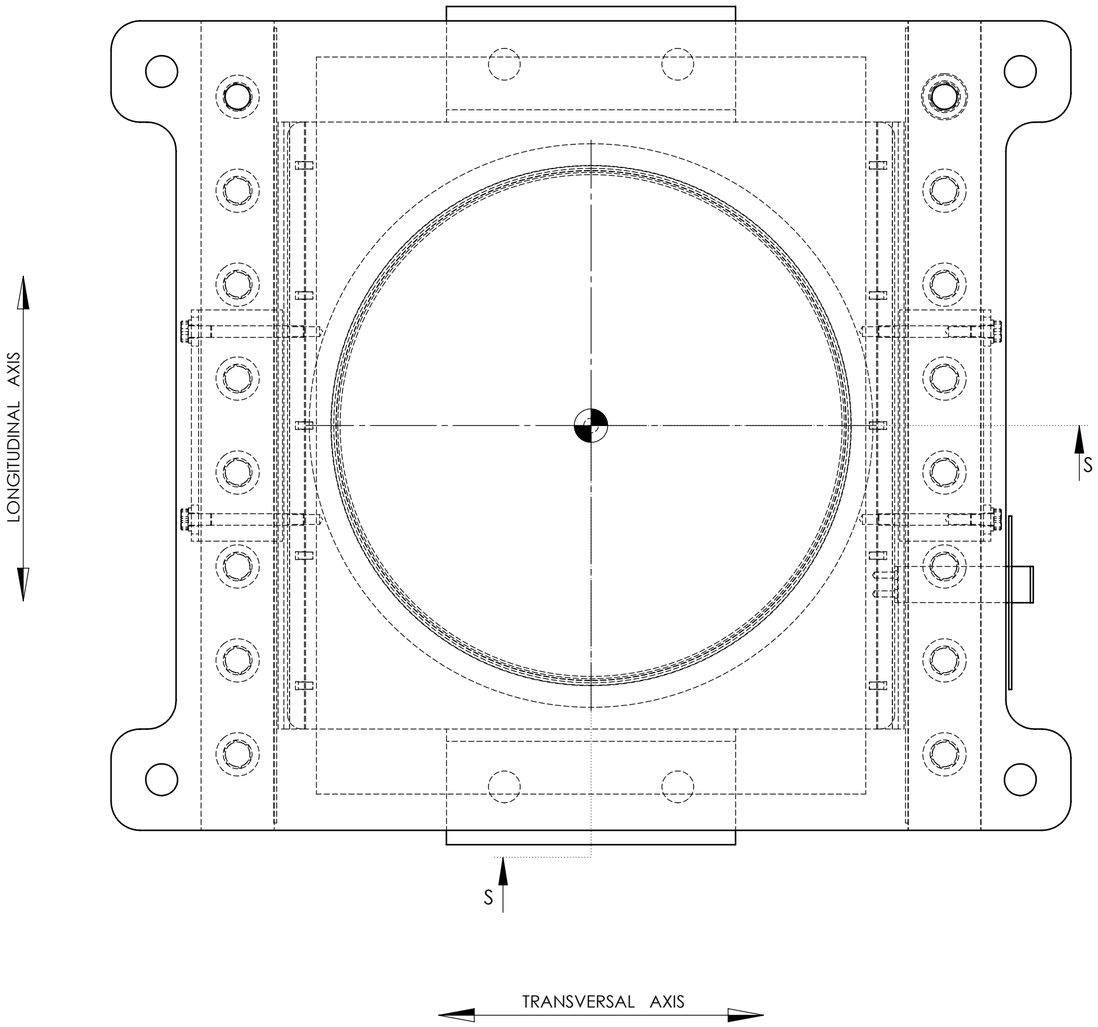

NOTE A: PROTECTIVE ANTICORROSION CYCLE ACCORDING TO EN 1337-9

1 Sand-blasting at white metal SA2.5

2 Bicomponent epoxidic covering at high thickness — Silver Grey color RAL7001

Minimum thickness dry film
- a) Exposed surface: 250 micron
- b) Worked surfaces and contact surfaces of concrete: 70 micron

NOTE C: CURVED MATING SURFACE WITH HARD CHROMIUM PLATING

MAX TEMPERATURE DESIGN: -

FOR SPHERICAL BEARING HEIGHT THE TOLERANCE IS: +5 mm ; - 5 mm

FOR STRUCTURAL DETAILS AND DIMENSIONS SEE THE CALCULATION REPORT

(*) Alternatively PTFE can be used
(**) Alternatively DUmetal can be used

Pos.	Quantity	Part Name	Material	Note
25	2	Guide Sliding Surface	AgomGlide®	(**)
18	2	Rotation Bar	C40 Cold-Drawn - EN10277	A
17	2	Lower Anchor plate	S275JR - EN10025	A
16	2	Lateral Sliding Surface	X5CrNiMo1712 - EN 10088-2	-
15	2	Lateral Guide Bar	C40 Cold-Drawn - EN10277	A
14	2	Removable Red Plate	S235JR (Red Painted) - EN10025	-
13	1	Graduated Scale	Alluminio Bronzo	
12	1	Movement Gauge	X5CrNiMo1712 - EN 10088-2	
11	1	Sliding Surface	X5CrNiMo1712 - EN 10088-2	
10	1	Upper Plate	S355JR - EN10025	A
9	1	Flat Sliding Surface	AgomGlide®	(*)
8	1	Median Plate	S355J2G3 - EN10025	A / C
7	1	Curved Sliding Surface	AgomGlide®	(*)
6	1	Basament	S355JR - EN10025	A

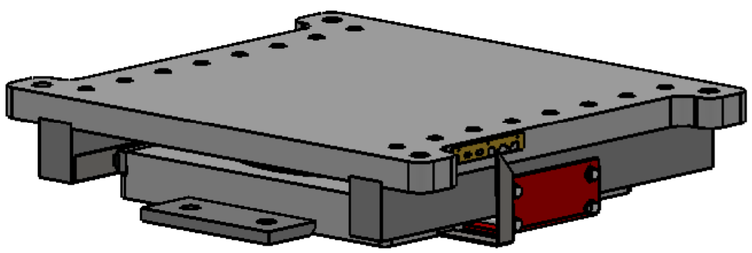

Revision	Object	Date Last modified
00	FIRST ISSUE	23/03/2012

Drawn by	Checked by	Approved by
Gianni Ruco	Daniele Colombo	M.Battaini

AGOM INTERNATIONAL Srl
Via Messero, 12
20010 Ossona (MI)

IDEAS, ENGINEERING AND MANUFACTURE

Guided spherical bearing
R-Max AGSL

Drawing number	Scale
01384	1:3

SIZE A2 594 x 420

CE

AGOM INTERNATIONAL S.r.l.

R- Max Free Sliding Spherical Bearing
Position: -

Type	Q.ty	Code	Max. Design Loads [kN]			Movement [mm]		Total Rotation [mrad]	Weight [Kg]
			VERT.	HORIZ.	UPLIFTING	LONG.	TRANS.		
AGSM	1	EN 1337-7	SLS - ULS -	- -	-	-	-	-	-
AGOM International Reference: 09-01314									

SEC. Q-Q

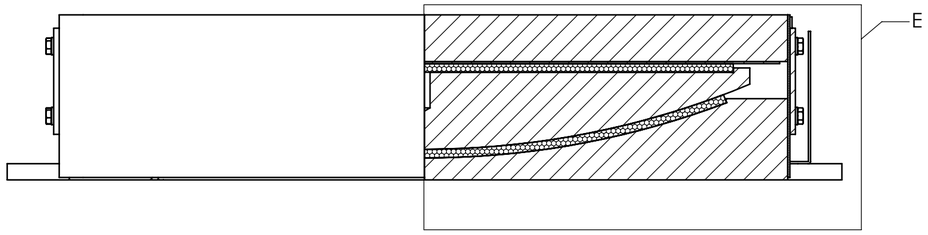

VIEW B

VIEW FROM B

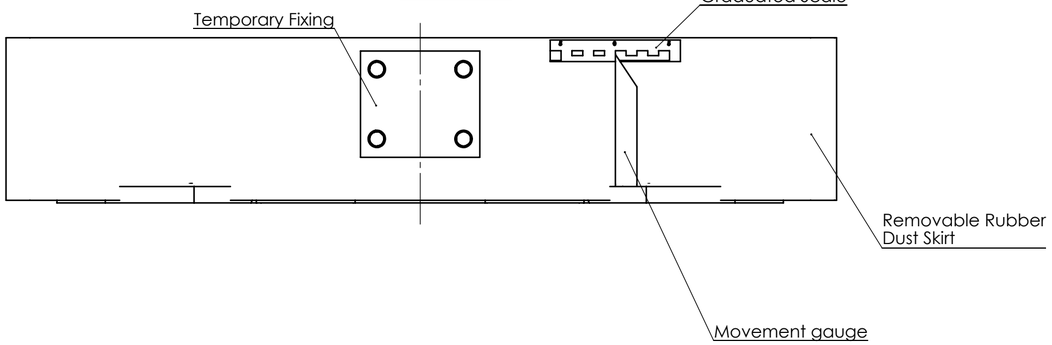

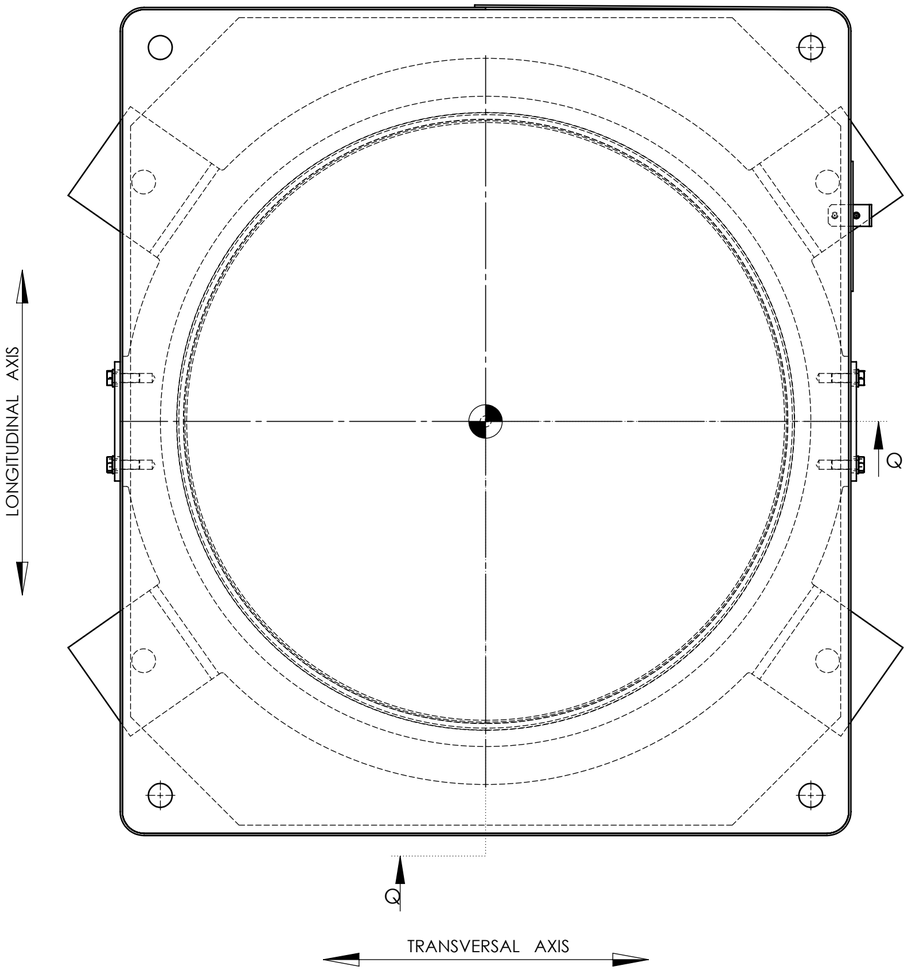

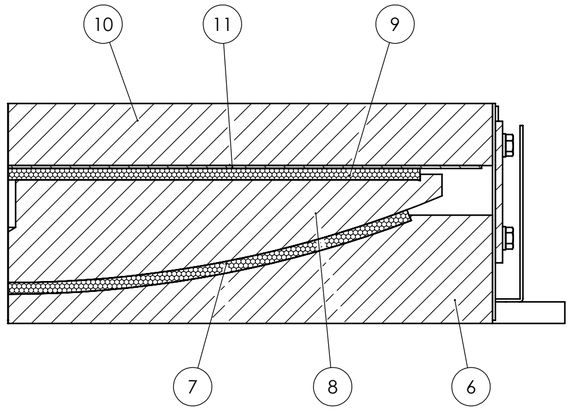

NOTE A: PROTECTIVE ANTICORROSION CYCLE ACCORDING TO EN 1337-9

2 Bicomponent epoxidic covering at high thickness — Silver Grey color RAL7001

Minimum thickness dry film — a) Exposed surface: 250 micron

b) Worked surfaces and contact surfaces of concrete: 70 micron

NOTE C: CURVED MATING SURFACE WITH HARD CHROMIUM PLATING

MAX TEMPERATURE DESIGN: -

FOR SPHERICAL BEARING HEIGHT THE TOLERANCE IS: +5 mm ; - 5 mm

FOR STRUCTURAL DETAILS AND DIMENSIONS SEE THE CALCULATION REPORT

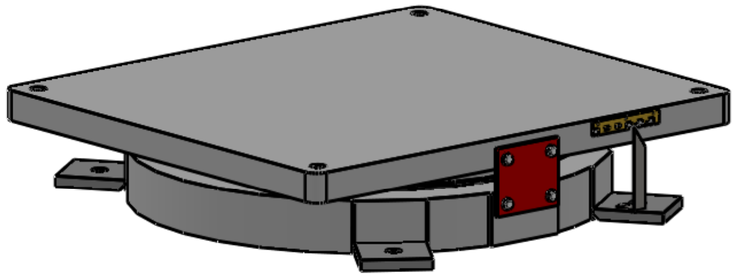

(*) Alternatively PTFE can be used

Pos.	Quantity	Part Name	Material	Note
20	4	Lower Anchor plate	S275JR - EN10025	A
15	2	Removable Red Plate	S235JR (Red Painted) - EN10025	-
14	1	Graduated Scale	Alluminio Bronzo	
13	1	Movement Gauge	X5CrNiMo1712 - EN 10088-2	
12	1	Romovable Rubber	Neoprene (Sheet)	
11	1	Mating Surface	X5CrNiMo1712 - EN 10088-2	
10	1	Upper Plate	S355JR - EN10025	A
9	1	Flat Sliding Surface	AgomGlide®	(*)
8	1	Median Plate	S355J2G3 - EN10025	A/C
7	1	Curved Sliding Surface	AgomGlide®	(*)
6	1	Upper Plate	S355JR - EN10025	A

Revision	Object	Date Last modified
00	FIRST ISSUE	23/03/2012

Drawn by	Checked by	Approved by
Gianni Ruco	Daniele Colombo	M.Battaini

AGOM IDEAS, ENGINEERING AND MANUFACTURE

AGOM INTERNATIONAL Srl
Via Mesero, 12
20010 Ossona (MI)

Free sliding spherical bearing
R-Max AGSM

Drawing number	Scale
01385	1:4

Section 5

Agom R-Max spherical bearings

a) Catalogue
b) Technical data sheet
c) Drawings
d) Installation instructions

SIZE A3 420 x 297

R-Max TYPICAL INSTALLATION PROCEDURE - CAST IN SITU STRUCTURES

1

CONCRETE SURFACES
PREPARED WITH HOLES

2

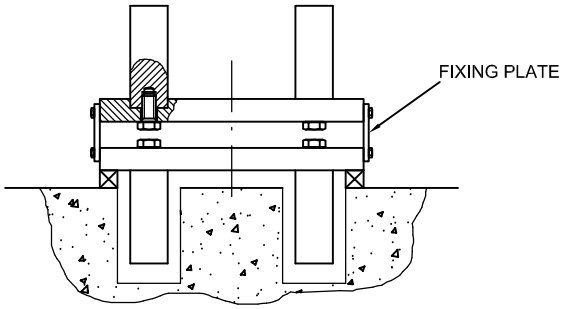

POSITIONING OF THE
ASSEMBLED BEARING ONTO
POSITIONING TOOLS

3

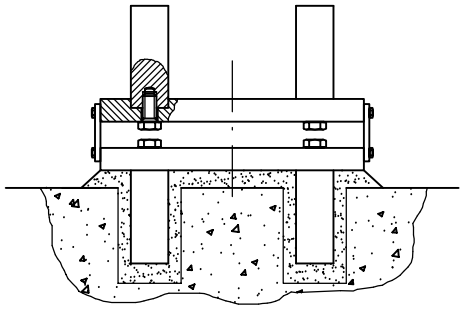

FILLING WITH RESINS

4

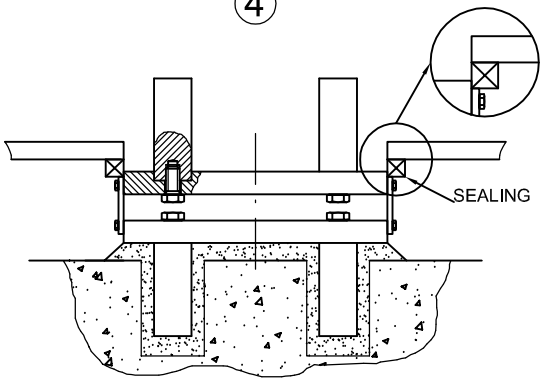

POSITIONING OF THE
FORMWORK ALL AROUND
THE R-MAX TOP PLATE

5

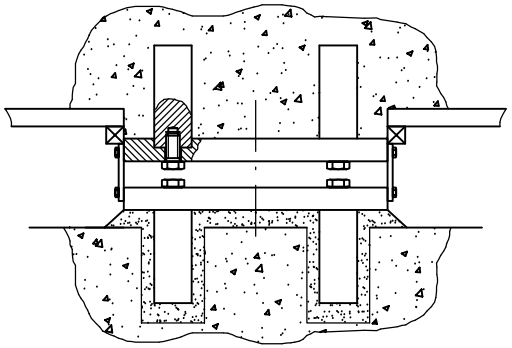

CONCRETING OF THE
DECK

6

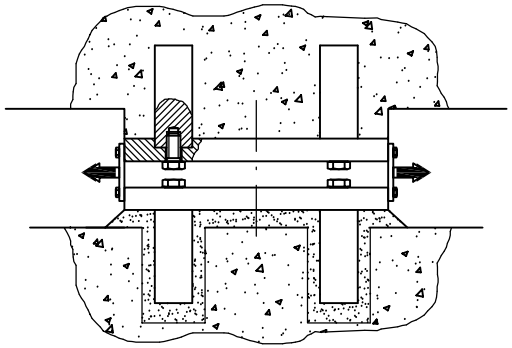

REMOVAL OF THE FIXING PLATE AND
BEARING INSTALLED

INSTALLATION PROCEDURE MAY BE CHANGED ACCORDING TO THE SPECIFICAL NEEDS OF EACH PROJECT

DATE 29/11/2011	OBJECT FIRST ISSUE	REVISION 00
CUSTOMER / JOB R-Max INSTALLATION FOR CAST IN SITU STRUCTURES Conceptual Scheme		NOT IN SCALE DRAWING DRAWN: GR CHECKED: DC APPROVED: MB
AGOM IDEAS, ENGINEERING AND MANUFACTURE	AGOM INTERNATIONAL S. r. l. Via Mesero, 12 20010 Ossona (MI)	DWG N° 01349

SIZE A0 1189 x 841

INSTALLATION PROCEDURE FOR R-Max BEARINGS - PRE-CAST BEAM

1 MANUFACTURING PRECAST BEAM WITH MASONRY PLATES

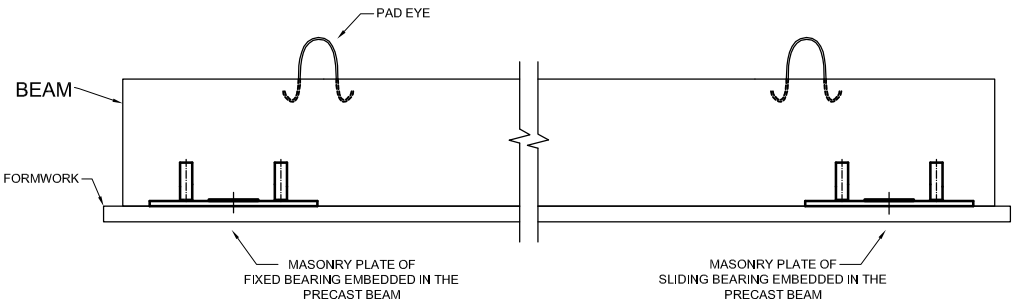

2 POSITIONING THE BEARINGS ON THE PIER OR ABUTMENTS

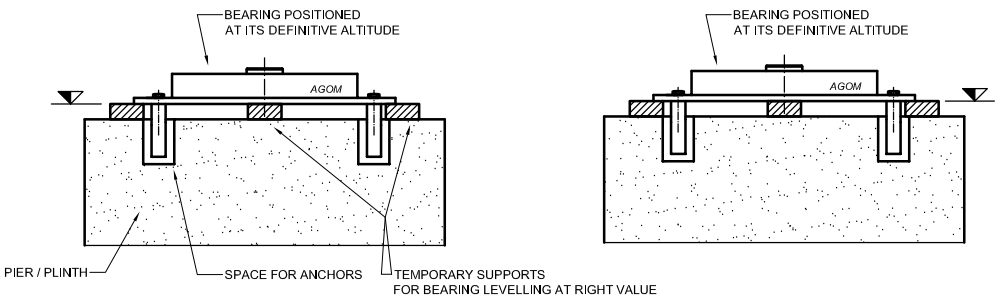

3 LAUNCHING THE BEAM AND MOVING THE BEARINGS TO FIT THE CONNECTIONS

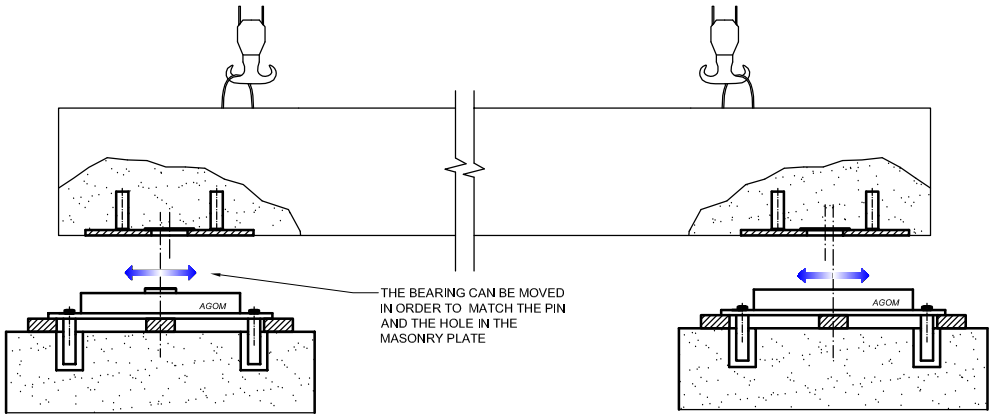

4 MOVING THE BEAM IN ITS DEFINITIVE POSITION

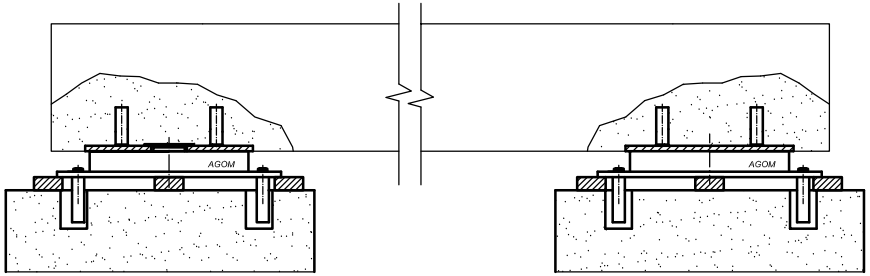

5 UNHOOKING THE BEAM AND CASTING HIGH RESISTANCE ANTI-SHRINKAGE MORTAR FOR THE ANCHOR BAR

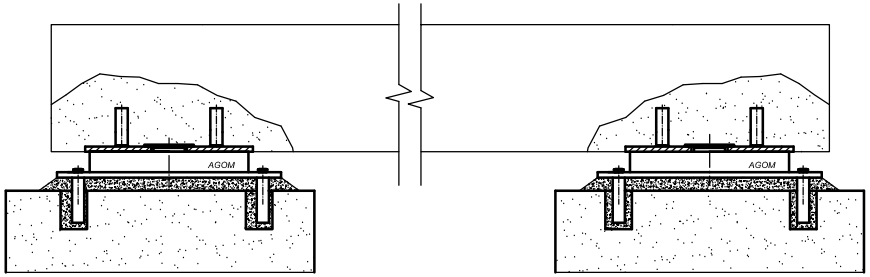

6 POSITIONING OF PREDALLES AND CASTING THE DECK

7 REMOVING THE RED PLATES OF THE BEARINGS

DATE 29/11/2011	OBJECT Prima emissione	00
OBJECT ISTALLATION PROCEDURE FOR R-Max BEARINGS - PRE-CAST BEAM		NOT IN SCALE DRAWING
		DISEGNATO: GR VERIFICATO: DC APPROVATO: MB
AGOM SEAL ENGINEERING AND MANUFACTURE	AGOM INTERNATIONAL S. r. l. Via Mesero, 12 20010 Ossona (MI)	DWG N° 01350